RANDA KL

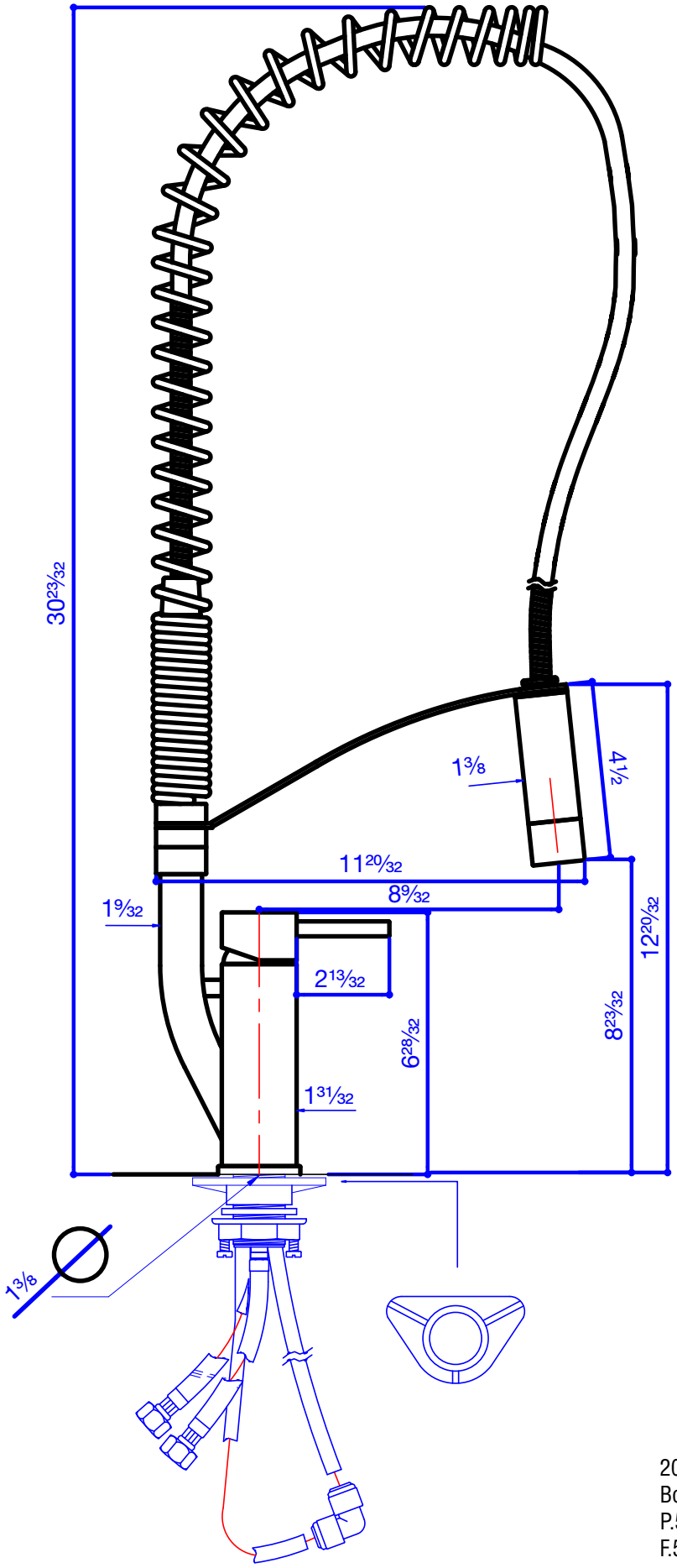

MGS
DESIGNS

20423 State Rd. 7, F6-291
Boca Raton, FL 33498
P.561-218-8798
F.561-218-8799